Cambridge International AS & A Level

Cambridge Assessment International Education
Cambridge International Advanced Subsidiary and Advanced Level

BUSINESS **9609/32**

Paper 3 Case Studies **March 2019**

MARK SCHEME

Maximum Mark: 100

Published

This mark scheme is published as an aid to teachers and candidates, to indicate the requirements of the examination. It shows the basis on which Examiners were instructed to award marks. It does not indicate the details of the discussions that took place at an Examiners' meeting before marking began, which would have considered the acceptability of alternative answers.

Mark schemes should be read in conjunction with the question paper and the Principal Examiner Report for Teachers.

Cambridge International will not enter into discussions about these mark schemes.

Cambridge International is publishing the mark schemes for the March 2019 series for most Cambridge IGCSE™, Cambridge International A and AS Level components and some Cambridge O Level components.

This document consists of **19** printed pages.

© UCLES 2019

Cambridge Assessment International Education

[Turn over

Generic Marking Principles

These general marking principles must be applied by all examiners when marking candidate answers. They should be applied alongside the specific content of the mark scheme or generic level descriptors for a question. Each question paper and mark scheme will also comply with these marking principles.

GENERIC MARKING PRINCIPLE 1:

Marks must be awarded in line with:

- the specific content of the mark scheme or the generic level descriptors for the question
- the specific skills defined in the mark scheme or in the generic level descriptors for the question
- the standard of response required by a candidate as exemplified by the standardisation scripts.

GENERIC MARKING PRINCIPLE 2:

Marks awarded are always **whole marks** (not half marks, or other fractions).

GENERIC MARKING PRINCIPLE 3:

Marks must be awarded **positively**:

- marks are awarded for correct/valid answers, as defined in the mark scheme. However, credit is given for valid answers which go beyond the scope of the syllabus and mark scheme, referring to your Team Leader as appropriate
- marks are awarded when candidates clearly demonstrate what they know and can do
- marks are not deducted for errors
- marks are not deducted for omissions
- answers should only be judged on the quality of spelling, punctuation and grammar when these features are specifically assessed by the question as indicated by the mark scheme. The meaning, however, should be unambiguous.

GENERIC MARKING PRINCIPLE 4:

Rules must be applied consistently e.g. in situations where candidates have not followed instructions or in the application of generic level descriptors.

GENERIC MARKING PRINCIPLE 5:

Marks should be awarded using the full range of marks defined in the mark scheme for the question (however; the use of the full mark range may be limited according to the quality of the candidate responses seen).

GENERIC MARKING PRINCIPLE 6:

Marks awarded are based solely on the requirements as defined in the mark scheme. Marks should not be awarded with grade thresholds or grade descriptors in mind.

© UCLES 2019

<table>
<tr><th>Question</th><th>Answer</th><th>Marks</th></tr>
<tr><td>1</td><td>

Analyse the benefits to PY of maintaining a centralised organisational structure.

<table>
<tr><th>Level</th><th>Knowledge
3 marks</th><th>Application
2 marks</th><th>Analysis
5 marks</th></tr>
<tr><td>2</td><td>3 marks
Good knowledge of centralisation and benefits)</td><td>2 marks
Points applied to PY</td><td>4–5 marks
Good use of theory and/or reasoned argument to explain benefits</td></tr>
<tr><td>1</td><td>1–2 marks
Knowledge of centralisation and / or benefits</td><td>1 mark
Point applied to PY</td><td>1–3 marks
Some use of theory and/or reasoned argument to explain benefits</td></tr>
</table>

Examiner note: Do not reward comments on disadvantages

Knowledge

- Definition of centralised organisational structure. Keeps all the important decision making powers within head office or the centre of the organisation
- Delegation to managers is limited

Benefits of centralisation

- Consistent approach across organisation and its operations. National marketing can ensure that a consistent brand image and message is communicated to customers
- Economies of scale – marketing
- Builds brand image
- Customers can be confident of what they will get in each outlet; market research confirms that this is important
- Quick decision making.
- Avoids poor decisions being made at a local level

Application

- Yoon has focused on developing a coherent brand message to customers
- Consistent café style environment in all retail outlets – market research highlights that customers like the consistent service and product quality
- Quick decision making can enable PY to take advantage of opportunities such as in city X
- Yoon is experienced and has key influence on decisions
- National advertising has contributed to boosting PYs market share
- Linking benefit of centralisation to competitive market
- Central purchasing of supplies

</td><td>10</td></tr>
</table>

Question	Answer	Marks
1	**Analysis** • Economies of scale in marketing help keep average costs lower and thus raise profit • Quick decision making has facilitated the initial rapid expansion of the brand • Central buying generates EOS and reduces average costs	

Question	Answer	Marks
2(a)(i)	**Refer to the network diagram in Fig. 1, below and Table 2 in the Insert.** **Complete the network diagram at nodes 3 and 4.** Node 3: EST = 2 LFT = 2 Node 4: EST = 4 LFT = 7	**4**
2(a)(ii)	**State the activities on the critical path.** A C E K	**1**
2(a)(iii)	**State the minimum time to complete the opening of the new café.** 9 (weeks)	**1**
2(a)(iv)	**Calculate the free float of Activity F.** Free float = EST of next activity – duration this activity – EST of this activity (1) 5 – 3 – 2 (1) Free float F = 0 (weeks) (2)	**2**

Question	Answer	Marks
2(b)	**Refer to your answers to 2(a) and any other information. Discuss whether PY's directors should be confident that the café in city X will be open in time for the summer season.**	**12**

Level	Knowledge 2 marks	Application 2 marks	Analysis 4 marks	Evaluation 4 marks
2	2 marks Two relevant points	2 marks Factors well applied to PY	3–4 marks Good use of theory and/or reasoned argument to explain usefulness of network analysis	3–4 marks Good judgement shown e.g. well supported conclusion
1	1 mark Relevant point	1 mark Some application of factors to PY	1–2 marks Some use of theory and/or reasoned argument to explain usefulness of network analysis	1–2 marks Some judgement shown e.g. one factor very important

Examiner Note: If only refer to **2(a)** or other information limit to L1 AN & EVAL

Knowledge
Definition of network analysis: this is part of project management to ensure that resources are used efficiently. Also known as critical path analysis it identifies all tasks in a project, puts them in the correct sequence and allows for the identification of the critical path.

Benefits of network analysis
- Planning of when resources are needed and their use can save time
- Sets target to work towards
- Construction of network diagram forces managers to plan project carefully
- Identifies critical activities for management to focus on
- Figures are based on estimates / assumptions so could be unreliable

Application
- Identifies whether new outlet can be opened in time for peak seasonal demand
- 9 weeks minimum time according to the CPA
- 1 week float
- Reference to specific critical activities / aspects of the network e.g. equipment must be delivered by week 6
- 75 cafes so have done this multiple times before
- Some activities depend on external factors such as ordering and delivery of equipment and building work

Question	Answer	Marks
2(b)	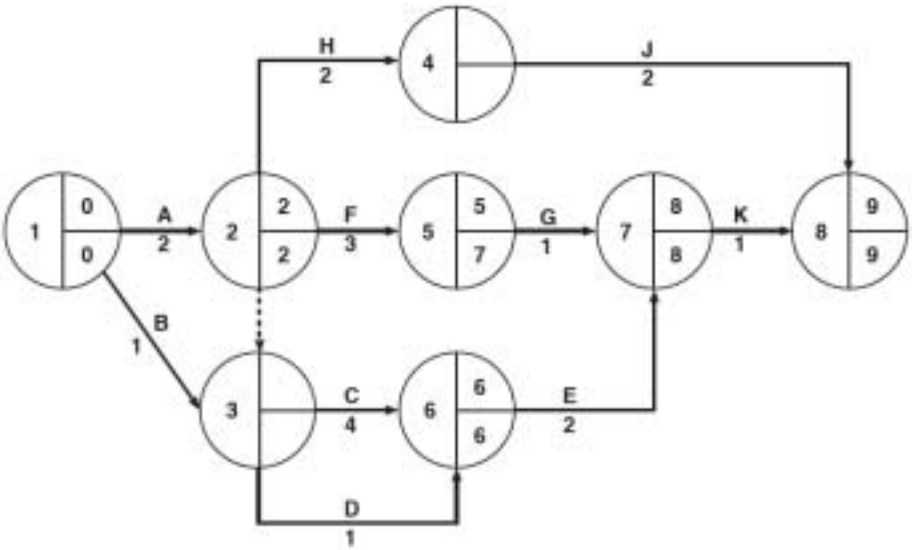	

Activity	Activity described	Preceding activities	Duration (weeks)
A	Negotiate rental agreement	None	2
B	Design interior changes	None	1
C	Building work changes	A & B	4
D	Order equipment and fittings	A & B	1
E	Install equipment	C & D	2
F	Recruit employees	A	3
G	Train employees	F	1
H	Plan marketing	A	2
J	Marketing activities	H	2
K	Test operations	E & G	1

Analysis

- Planning of when resources are needed help ensure project is more organised and therefore time is managed more effectively
- Targets set will help motivate staff and increase efficiency therefore more likely to be completed on time
- Construction of network diagram forces managers to plan project carefully and therefore coordinate resources such as HR, Operations and Finance
- Identifies critical activities for management to focus on. Thus, if critical activities are delayed managers can divert resources from non-critical activities to get project back on track
- Figures are based on estimates / assumptions so could be unreliable

Question	Answer	Marks
2(b)	**Evaluation** • Network presented is relatively simplistic – more detail needed • Doesn't guarantee that project will be completed on time • PY has experience of opening many outlets so should be relatively accurate • Needs to be managed effectively • No control over external influences e.g. suppliers • Not much margin for error as only one week float	

<table>
<tr><th>Question</th><th>Answer</th><th>Marks</th></tr>
<tr><td>3</td><td>

Recommend whether PY should close the three cafés in the North East of country S. Justify your answer with reference to Table 1 and other information.

<table>
<tr><th>Level</th><th>Knowledge
2 marks</th><th>Application
2 marks</th><th>Analysis
6 marks</th><th>Evaluation
6 marks</th></tr>
<tr><td>2</td><td>2 marks
Good knowledge shown</td><td>2 marks
Good application to PY</td><td>4–6 marks
Good use of theory and/or reasoned argument to explain ads/disads of closing the outlets</td><td>4–6 marks
Good judgement shown on closure decision</td></tr>
<tr><td>1</td><td>1 mark
Some knowledge shown</td><td>1 mark
Some application to PY</td><td>1–3 marks
Some use of theory and/or reasoned argument to explain ads/disads of closing the outlets</td><td>1–3 marks
Some judgement shown on closure decision</td></tr>
</table>

Examiner Note: If only refer to Table 1 or other information limit to L1 AN & EVAL

Knowledge
- Understanding of fixed costs – costs that don’t change with output
- Understanding of contribution concept. The contribution represents an increase in PY’s overall profit
- Understanding of full costing

Application
- Calculation of contribution: 2.25 – 1.45 = $0.8m
- Full costing gives a loss of $0.4m
- Forecast profit $0.4m
- Reference to specific fixed cost e.g. lease of premises
- Yoon is worried about the performance of the 3 cafes so could this divert attention away from the other cafes

Reasons for closure
- Making a loss on full cost basis
- NE of country S is relatively poor so sales may not increase in the future
- Most employees likely to be new so costs of redundancy may be low or even zero depending on employment legislation of country S

</td><td>16</td></tr>
</table>

Question	Answer	Marks
3	*Reasons against closure* • Only operating one year. Is that sufficient time to make judgement? • A positive contribution is being made to paying fixed costs. These costs will continue to be incurred even if the outlets are closed • 25 employees depend on the outlets for income – this may be important in light of the criticisms of PY made in the documentary • Signed lease contract until 2021 • Impact on other employee morale if employees made redundant • Damage to brand if closures announced **Analysis** • Loss of positive contribution may mean that in the short term PY's overall profits will be reduced as fixed costs continue to be paid such as the leasing cost • Closure of outlets will negatively impact worker morale elsewhere in the organisation leading to loss of effectiveness • Closure of outlets will signal to other workers need to work harder to retain jobs • Use of zero hour contracts could mean that redundancy costs are low if closed • Impact on brand image could lead to loss of sales • Alternatives to closure include cutting prices to boost demand as NE is relatively poor • Cutting costs by using local suppliers? **Evaluation** • Can PY break the terms of the contract without significant penalty? • Are sales likely to pick up in the future? • What is the overall financial position of PY – can they afford to turn the three outlets around • Supported identification of most important factor in the decision • Only operating one year. Is that sufficient time to make judgement? • Overall argument for or against closure	

Question	Answer	Marks
4(a)(i)	**Refer to the table in Appendix 1. Calculate:** **seasonal variation in 2018 Quarter 1** –$1.56m (1) Allow -1.56 21.5 – 23.06 No marks for $1.56m	**1**

Question	Answer	Marks
4(a)(ii)	**average seasonal variation in Quarter 2.** $\frac{\text{Sum of seasonal variations in Q2}}{\text{Number of seasonal variations}}$ (1) [if no calculation] –0.56 + -1.41 + –1.35 + – 1.75 = -5.07 $\frac{-5.07}{4}$ (1) Average seasonal variation Q2 = –$1.27m (2) Allow –1.27 Or –$1.2675m	**2**
4(b)	**Refer to Appendix 1 and Appendix 2. Calculate PY's forecast sales for Quarter 3 in 2019.** Predicted trend from inspection of graph: $24.2m (1) Add average seasonal variation Q3 = $5.42m (1) Forecast = $29.62m (3) 29.62 (2) Up to 2 marks can be awarded for: • Logical attempt to predict trend using the table (e.g. by considering the average of the Quarter 3s) (1) • Correct use of seasonal variation (1)	**3**

Question	Answer	Marks
4(c)	**Refer to your result from 4(b) and any other information. Discuss the usefulness of sales forecasting to PY when making marketing decisions.**	**12**

Level	Knowledge 2 marks	Application 2 marks	Analysis 4 marks	Evaluation 4 marks
2	2 marks Good knowledge shown of sales forecasts & decisions	2 marks Points well applied to PY	3–4 marks Good use of theory and/or reasoned argument	3–4 marks Good judgement shown e.g. well supported conclusion
1	1 mark Knowledge shown of forecasts or decisions	1 mark Some application to PY	1–2 marks Some use of theory and/or reasoned argument	1–2 marks Some judgement shown

Examiner Note: If only refer to **4(b)**) or other information limit to L1 AN & EVAL

Knowledge
- Definition: predicting future sales and sales trends
- Although not in the syllabus candidates may refer to methods such as Delphi method; sales-force composite; jury of experts
- Sales forecasting using Time Series Analysis takes account of seasonal variations and gives a realistic prediction.
- Forecasting enables planning
- How forecasts contribute to market planning

Application
- PY faces clear seasonal variation and consistent past trends so it is reasonable to assume that the future will be similar, making forecasting valuable for planning.
- Case indicates possible changes to the market – market increasingly saturated; growth of competitor and the negative publicity

Analysis
- Identification of seasonal variation may inform PY decisions regarding marketing mix during different times of year. For example may encourage changes to pricing tactics in off season to boost sales.
- Knowledge of forecast sales can be used to adjust marketing strategy in the future. Altering the level of promotional expenditure for example if there is a dip in sales projected.
- Other factors will also be significant in determining the marketing mix. For example, decisions of competitors such as Blue Berry – if they increase promotional expenditure it may be necessary for PY to respond with their own campaigns to maintain sales.
- Important to also analyse why trends may be changing as part of the process of making marketing decisions

Question	Answer	Marks
4(c)	**Evaluation** • More reliable than simple forecasting or just projecting a trend • Relies on future events behaving as in past patterns so may not be reliable e.g. negative publicity • Other evidence needs to be taken into account e.g. prediction of competitors' behaviour, likely future government actions, and/or economic changes • May be advisable to introduce an element of probability to the forecasts – what if analysis.	

Question	Answer	Marks
5	**Assess the significance of corporate social responsibility (CSR) to PY's future profitability.**	**16**

Level	Knowledge 2 marks	Application 2 marks	Analysis 6 marks	Evaluation 6 marks
2	2 marks Good knowledge shown	2 marks Good application to PY	4–6 marks Good use of theory and/or reasoned argument	4–6 marks Good judgement shown
1	1 mark Some knowledge shown	1 mark Some application to PY	1–3 marks Some use of theory and/or reasoned argument	1–3 marks Some judgement shown

Knowledge
Definition of CSR: this concept applies to those businesses that consider the interests of society by taking responsibility for the impact of their decisions and activities on customers, employees, communities and the environment

- Examples of what CSR involves
- Benefits of CSR in terms of brand image and USP
- Drawbacks of CSR in terms of costs and damage if PY doesn't adhere to its CSR goals

Application
- PY faces a number of CSR issues that could impact profitability
  - Negative publicity over sugar content of frozen yoghurt
  - Use of zero hour contracts
  - Payment of employees
  - Potential closure of three cafes
- Respond to the criticism and provide information to counteract the accusations if possible
- Increase advertising to counterbalance the bad publicity
- Change the products and reduce sugar content this could give PY a USP
- Introduce a policy on CSR to reassure customers and employees.
- Does PY need to change its marketing emphasis to reduce emphasis on healthy claims for their yoghurts?

Question	Answer	Marks
5	**Analysis** • PY may need to change tactics due to potential impact on revenues due to change in public image and branding – Impact on market share – Impact on profits • Benefits of CSR in terms of promoting brand image and increasing sales as a result • How CSR can give PY a USP and ability to take more control over pricing and therefore increase profits • Cost of CSR – higher wage costs, ingredient costs. Increased costs will reduce profit margins • Danger of claiming a socially responsible approach if it is not followed in reality. This could lead to backlash and loss of image and sales • Analysis of how PY's response to the documentary will impact sales and profits. PY may need to increase spending on marketing to counteract negative effects of bad publicity **Evaluation** • Judgement on the balance between costs and benefits of CSR to PY • Significance may depend on competitor behaviour. Can PY afford not to take CSR seriously? • There is a need for PY to address the issues highlighted by the documentary and social media reports. At the very least PY must deal with issue of minimum wage.	

Question	Answer	Marks

Questions 6 and 7 use this marking grid:

Level	Knowledge 3 marks	Application 3 marks	Analysis 4 marks	Evaluation 10 marks
3				7–10 marks Good judgement shown throughout with well supported conclusion/ recommendation, focused on the business in the case
2	3 marks Good understanding shown	3 marks Good application to the case	3–4 marks Good use of reasoned argument or use of theory to explain points made	4–6 marks Some judgement shown in the main body of the answer **and** an attempt to support conclusion/ recommendation, focused on the business in the case OR effective and well supported conclusion/ recommendation, focused on the business in the case
1	1–2 marks Some understanding shown	1–2 marks Some application to the case	1–2 marks Limited use of reasoned argument or use of theory to support points made	1–3 marks Limited attempt to show judgement either within the answer OR a weakly supported conclusion/ recommendation with some focus on the business in the case
0	No creditable content			

Question	Answer	Marks
6	**Yoon has produced a strategic analysis of PY's potential entry into the North American market.** **Evaluate the usefulness of this strategic analysis to PY's Directors when they consider the plan to expand into North America.** **Knowledge** • Explanation of strategic analysis and its techniques – SWOT, PEST, Boston Matrix, Porters 5 Forces, core competencies. • Effective strategic analysis may result in clearer and more relevant business objective, better strategic decisions and less risk as PY will be better prepared for the future • Place of strategic techniques in strategic management • Need to understand the external environment in North America – requiring a detailed PEST analysis **Application** Exploration of range of factors contained in Appendix 3 in particular: • Implications of high gearing linked to need to raise $20m finance • 5% growth of the North American market link to PY objective of growth • Saturated market in country S link to PY objective of growth • Impact of a focus on international expansion on PY's ability to deal with the challenge of Blue Berry in country S • Reference to Porter's Five Forces, Appendix 4. – Need to overcome the brand preference of established business – Significance of threat of substitutes for pricing tactics – Economies of scale low indicates that PY can be price competitive – Individual consumers so limited negotiating power – Limited supplier power **Analysis** • The time, money and effort needed to conduct SA and impact on PY • How SA will improve business planning and thus reduce risk e.g. PY will be able to work on marketing strategy to overcome brand preferences. May need to increase marketing budget to be successful • Understanding the American market through appropriate PEST analysis will inform PY's decisions and improve effectiveness of marketing • Limited supplier power therefore PY may be able to negotiate favourable terms • SWOT/Pest analysis will mean that PY considers a range of internal and external factors thus reducing risk of expansion into North American market • Helps to prioritise strategies, for example, to deal with weaknesses of PY • Dynamic markets so analysis can quickly become outdated • Subjective nature of the analysis • Simplistic listing approach of the techniques	**20**

Question	Answer	Marks
6	**Evaluation** Clear conclusion as to the importance of strategic analysis and/or techniques including: • Critical comments on the techniques e.g. Boston Matrix not relevant to this decision • Importance of understanding where the business is now in order to generate ideas and/or support for overseas expansion • Comments that strategic analysis on its own is not enough to fully support a decision. Need for strategic choice techniques. • Weighing up importance of other stages in strategic management especially objectives and choice techniques in relation to strategic analysis • Ranking the usefulness of the techniques in relation to overseas expansion • An assessment of the relative importance of business planning in relation to strategic analysis • An assessment of the importance of timing and a timescale in carrying out analysis.	

Question	Answer	Marks
7	**Evaluate the importance of business planning to the future success of PY.** **Knowledge** Definition: A business plan is a detailed report on a company's future long-term aims/objectives and the strategies it will follow to achieve them. Answers could include: • A business plan: – Gives direction to the business. The plan provides PY directors with a clear focus for what the company should be trying to achieve in the medium term. – Helps motivate staff. It provides a sense of purpose. – Enables planning at different levels of the business and ensures all staff are working towards the same goals. – Acts as a means for control and review. Actual outcomes can be compared with the objectives set and the performance of PY can be assessed. – Helps ensure that resources are used effectively and that all departments are working together. • The planning process itself is useful. It encourages directors and managers to consider the current situation of the firm and to set objectives accordingly. • How dynamic markets may undermine plans • Potential link between profitability and having clear business plans. • Planning of finance (sources and time-scales) will impact on expenses which can affect profitability **Application** • Need to secure finance for expansion to North America. Planning essential to convincing financiers to support expansion. • Reference to potential problems resulting from TV documentary. Contingency plan could have reduced likely impact • Reference to PY's SWOT analysis and Porter's Five Forces as part of planning process • Reference to decision regarding the three cafes in North East.	**20**

Question	Answer	Marks
7	**Analysis** • Benefits of direction given for employees and their motivation linking to efficiency and achievement of objectives • SWOT analysis / Porter's Five Forces and links to effective decision making regarding expansion. Analysis will reduce risk to PY in its decision making and thus help to ensure profitability. • Contingency plan could have enabled PY to deal effectively with TV documentary and thus protect profits and protect brand image • Better planning may have avoided problems with the three cafes. Marketing support might have been identified as necessary to meet sales targets **Evaluation** • Needs to be flexible and adaptable to meet new situations. • Reliability of information – how much is spent on market research/data gathering and how relevant is it? Interpretation of information used in planning can be influenced by skills and training of leadership. • Reference to decision regarding the three cafes in North East. Was planning effective? Was there sufficient market research? • Planning is time-consuming and can be expensive • As there is a dynamic business environment therefore there is a need to adjust plans accordingly • Planning doesn't guarantee success. It may be of little significance unless it is acted upon • Plans may be restrictive and discourage be responsive to changes in the market • Depends on the level of detail • For new markets such as North America business planning may be more important as PY limited knowledge of the market and cost of expansion is significant • Monitoring and review essential to ensure costs are not increasing in this rapidly changing market	

© UCLES 2019